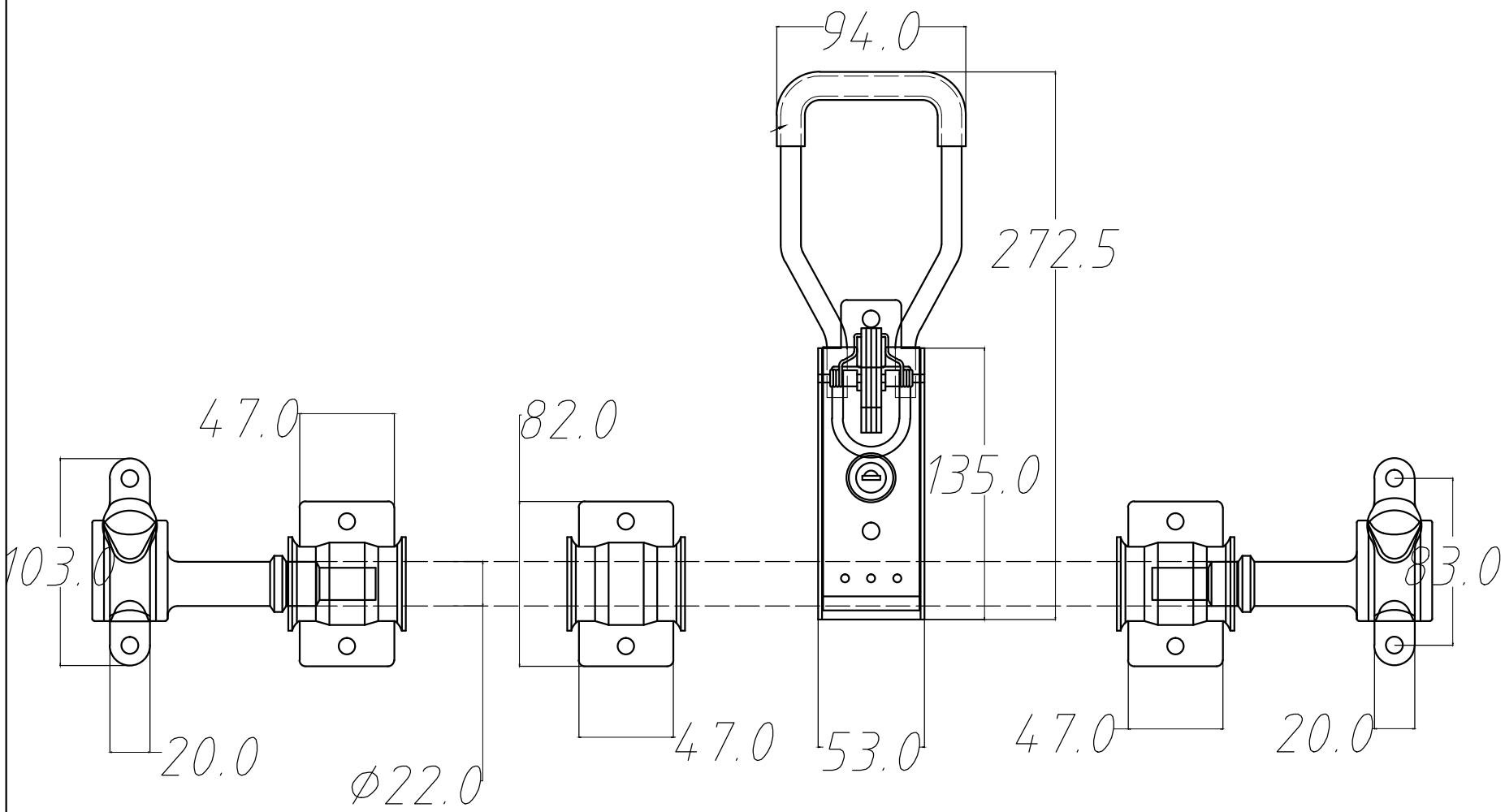

						A11012Z
						884.015.370.211